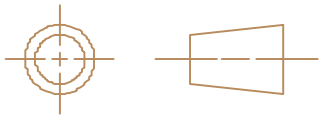

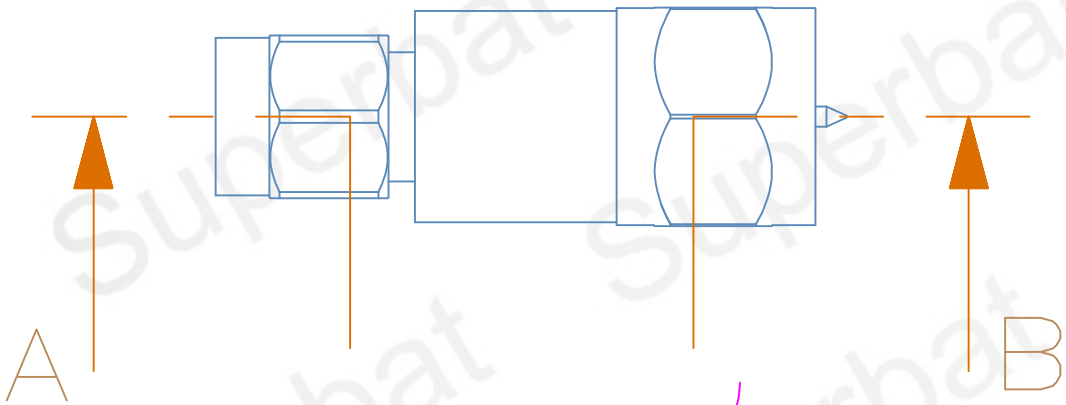
A
B

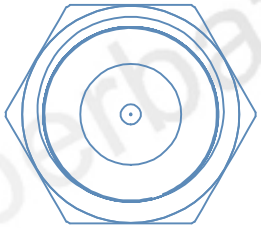

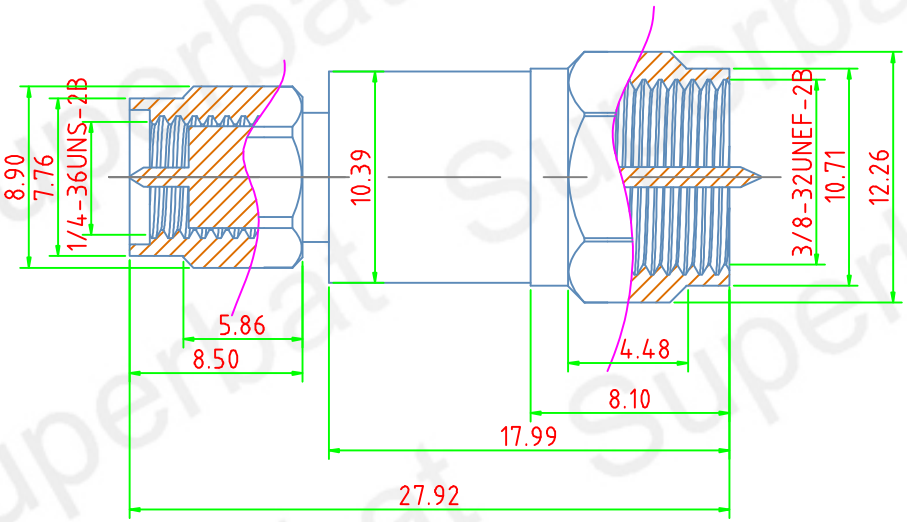
8.90
7.76
1/4-36UNS-2B
10.39
3/8-32UNEF-2B
10.71
12.26
5.86
8.50
4.48
8.10
17.99
27.92

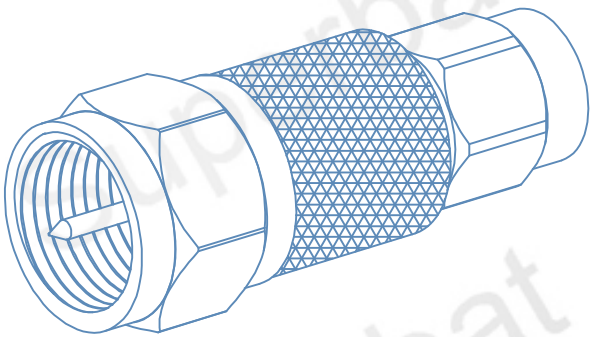

Superbat